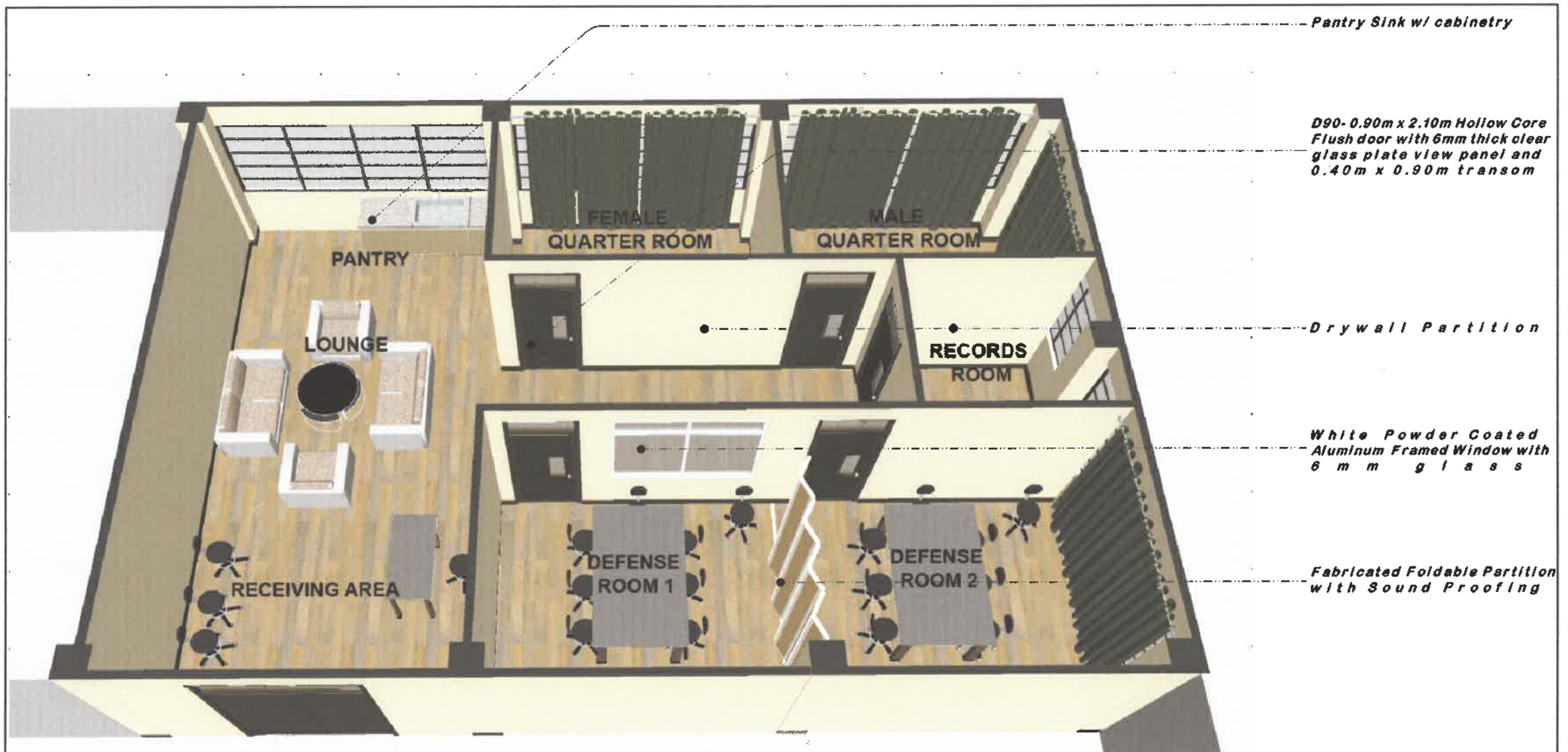

1 / A1 PERSPECTIVE
NOT TO SCALE

HAZELINE N. TIBANGAY UNIVERSITY ARCHITECT PRC LIC. No. 028540 VALIDITY: PTR No. ISSUED:	PRC LIC. No. VALIDITY: PTR No. ISSUED:	EMS- NOV.2023	REPAIR &UPGRADING OF AC 208 LABORATORY OF CA BSU,KM.6 BSU COMPOUND LA TRINIDAD, BENGUET PROJECT / LOCATION		BENGUET STATE UNIVERSITY LA TRINIDAD, BENGUET OWNER	CONSTANTINO T. SULDAYPAN SR. END-USER	SAMUEL S. POLIDEN VP FOR ACADEMIC AFFAIRS	FELIPE SALAING COMILA PRESIDENT	SHEET CONTENT AS SHOWN REVISION DATE: REVISION NO.:	SHEET NO. A-1 1 / 10

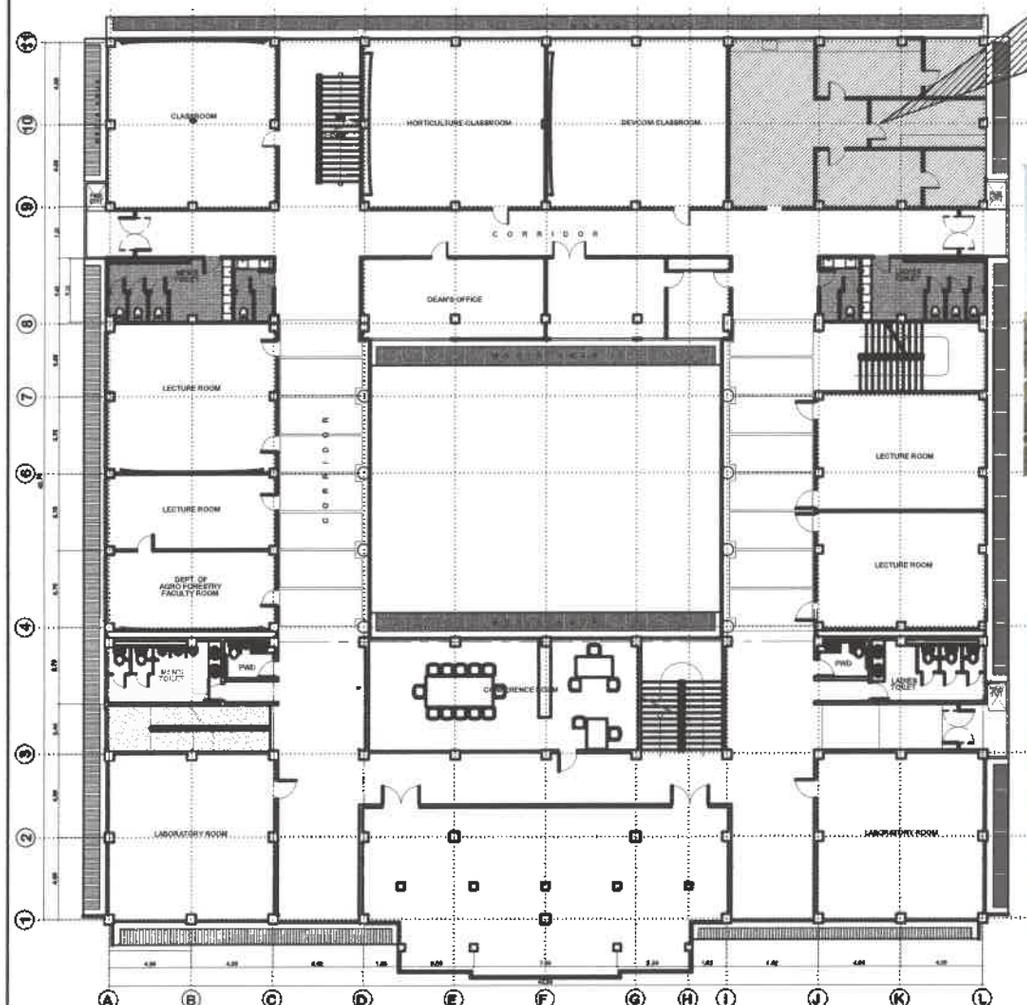

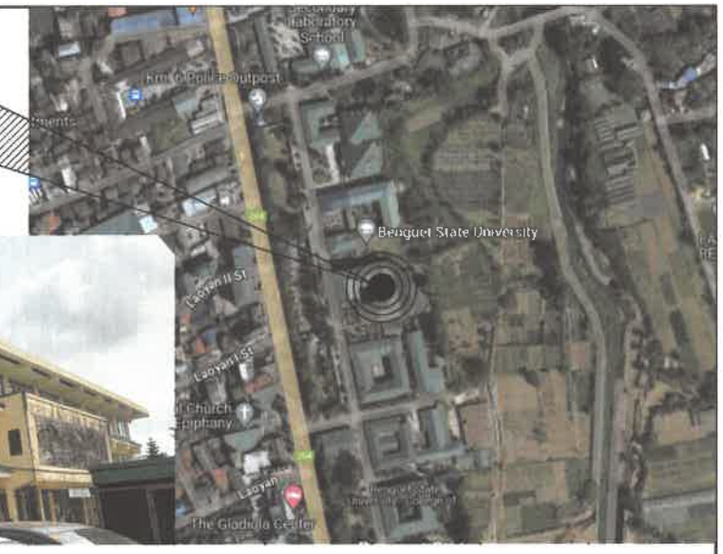

1 A2 **SECOND FLOOR PLAN(COLLEGE OF AGRICULTURE BUILDING)**

SCALE 1:300MTS

1 A2 **SITE PHOTOS**

NOT TO SCALE

HAZELINE N. TIBANGAY UNIVERSITY ARCHITECT			CAD BY: EMS- NOV.2023	REPAIR &UPGRADING OF AC 208 LABORATORY OF CA BSU,KM.6 BSU COMPOUND LA TRINIDAD, BENGUET	BENGUET STATE UNIVERSITY 1916	BENGUET STATE UNIVERSITY LA TRINIDAD, BENGUET	CONSTANTINO T. SUDAYPAN SR.	SAMUEL S. POLIDEN	FELIPE SALAING COMILA	SHEET CONTENT: AS SHOWN REVISION DATE: REVISION NO.:	SHEET NO. A-2 2 10
PRC LIC. No. 028540 PTR No.	VALIDITY: ISSUED:	PRC LIC. No. PTR No.	VALIDITY: ISSUED:	PROJECT / LOCATION		OWNER	END-USER	VP FOR ACADEMIC AFFAIRS	PRESIDENT		

LEGEND:

FF-1	CERAMIC TILES TO BE REMOVED AND REPLACED WITH VINYL TILES
FF-2	EXISTING VINYL TILES TO BE REMOVED AND REPLACED

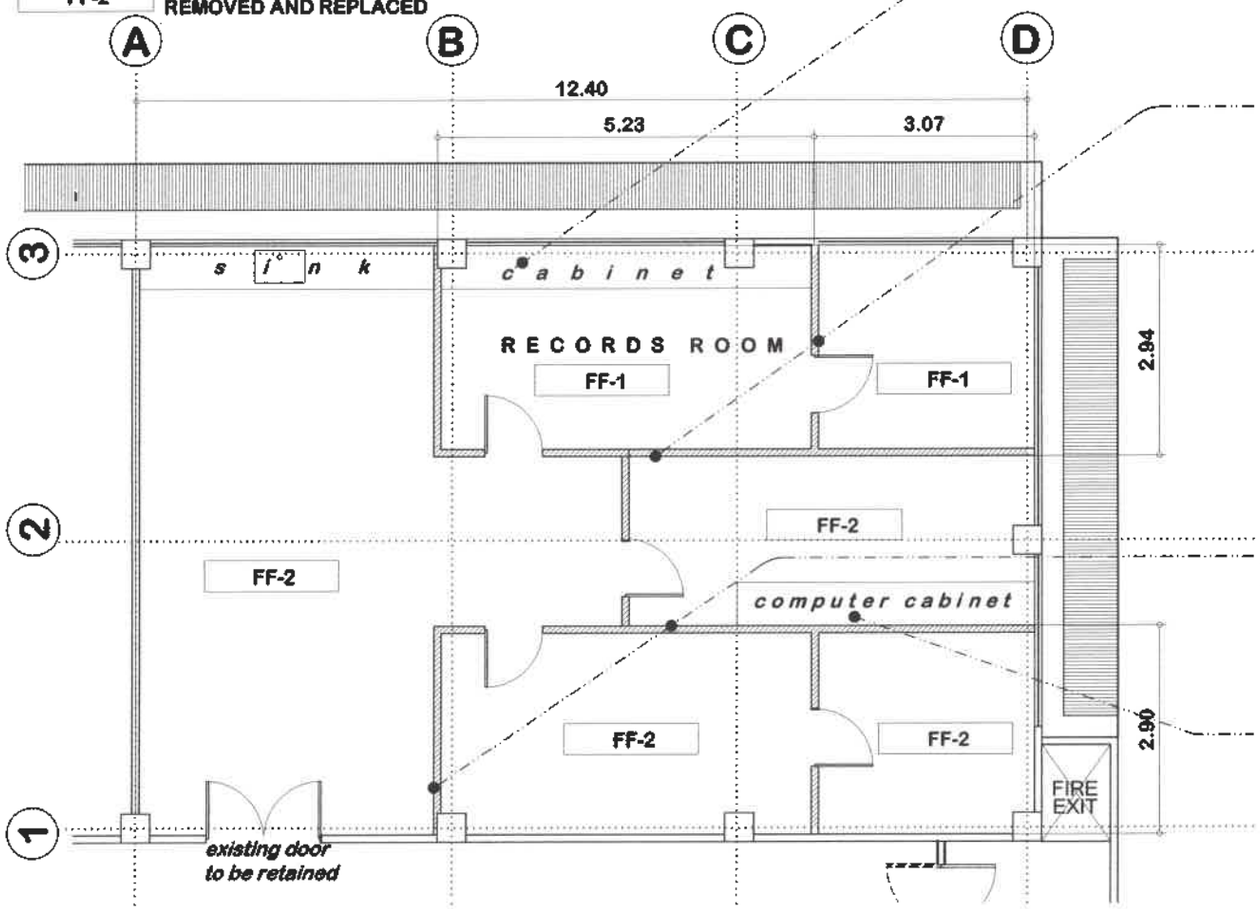

Existing cabinets to be dismantled

Existing drywall to be demolished

Existing drywall to be demolished

Existing computer cabinets to be dismantled

1 / A3 FLOOR PLAN (AS-BUILT)

SCALE 1:100MTS

HAZELINE N. TIBANGAY UNIVERSITY ARCHITECT PRC LIC. No. 028540 VALIDITY: PTR No. ISSUED:	PRC LIC. No. VALIDITY: PTR No. ISSUED:	CAD BY: EMS- NOV.2023	REPAIR &UPGRADING OF AC 208 LABORATORY OF CA BSU,KM.6 BSU COMPOUND LA TRINIDAD, BENGUET PROJECT / LOCATION	BENGUET STATE UNIVERSITY 1916	BENGUET STATE UNIVERSITY LA TRINIDAD, BENGUET OWNER	CONSTANTINO T. SUDAYPAN SR. BAD - UBP	SAMUEL S. POLIDEN VP FOR ACADEMIC AFFAIRS	FELIPE SALAING COMILA PRESIDENT	SHEET CONTENT: AS SHOWN REVISION DATE: REVISION NO.:	SHEET NO. A-3 3/10

LEGEND:

DRYWALL

FF-1 VINYL TILES

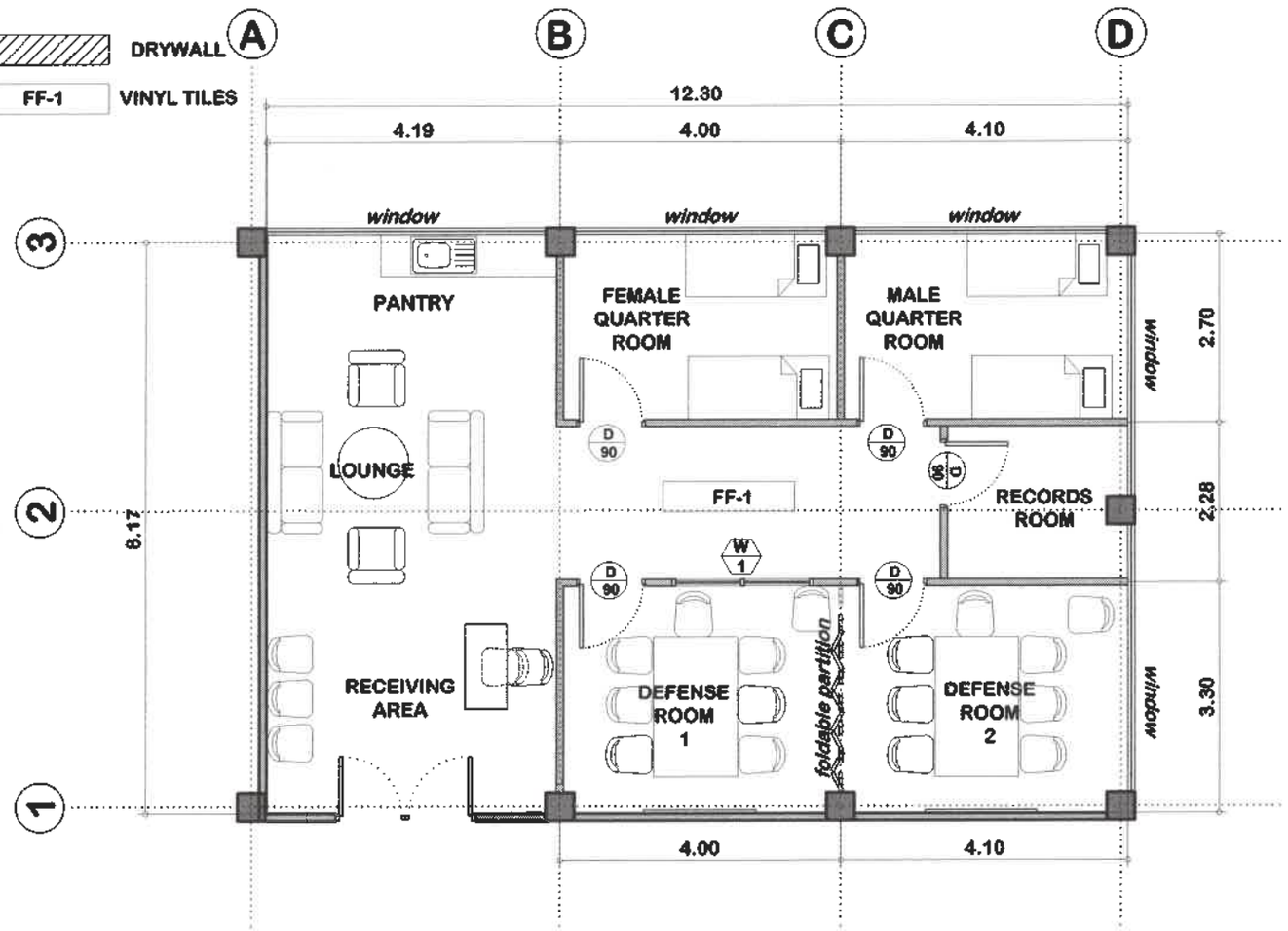

1 FLOOR PLAN (RENOVATION)

A 4 SCALE 1:100MTS

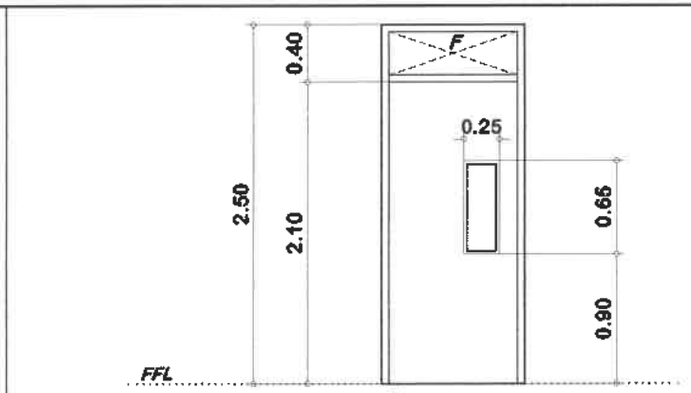

D90
NO. OF SETS: 5
Hollow Core Flush door with 6mm thick clear glass plate view panel and 0.40m x 0.90m transom (including jamb, frame, accessories and lockset)

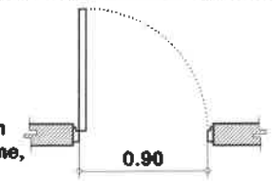

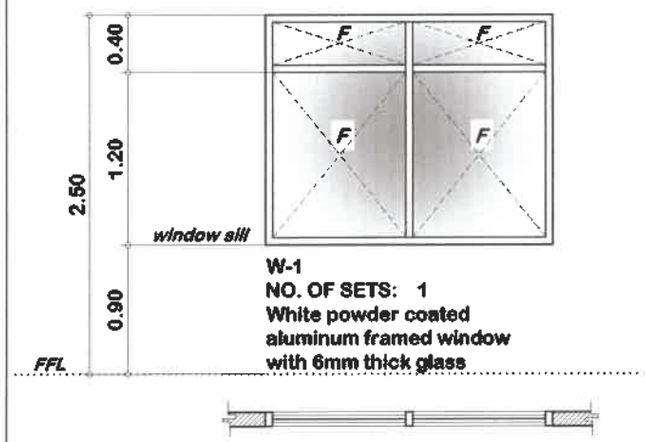

W-1
NO. OF SETS: 1
White powder coated aluminum framed window with 6mm thick glass

2 SCHEDULE OF DOORS AND WINDOWS

A 4 SCALE 1:40MTS

HAZELINE N. TIBANGAY UNIVERSITY ARCHITECT PRC LIC. No. 028540 VALIDITY: PTR No. ISSUED:		PRC LIC. No. VALIDITY: PTR No. ISSUED:	CAD BY: EMS- NOV.2023	REPAIR &UPGRADING OF AC 208 LABORATORY OF CA BSU,KM.6 BSU COMPOUND LA TRINIDAD, BENGUET PROJECT / LOCATION	BENGUET STATE UNIVERSITY LA TRINIDAD, BENGUET OWNER	CONSTANTINO T. SUDAYPAN SR. END USER	SAMUEL S. POLIDEN VP FOR ACADEMIC AFFAIRS	FELIPE SALAING COMILA PRESIDENT	SHEET CONTENT: AS SHOWN REVISION DATE: REVISION NO.:	SHEET NO. A-4 4 10

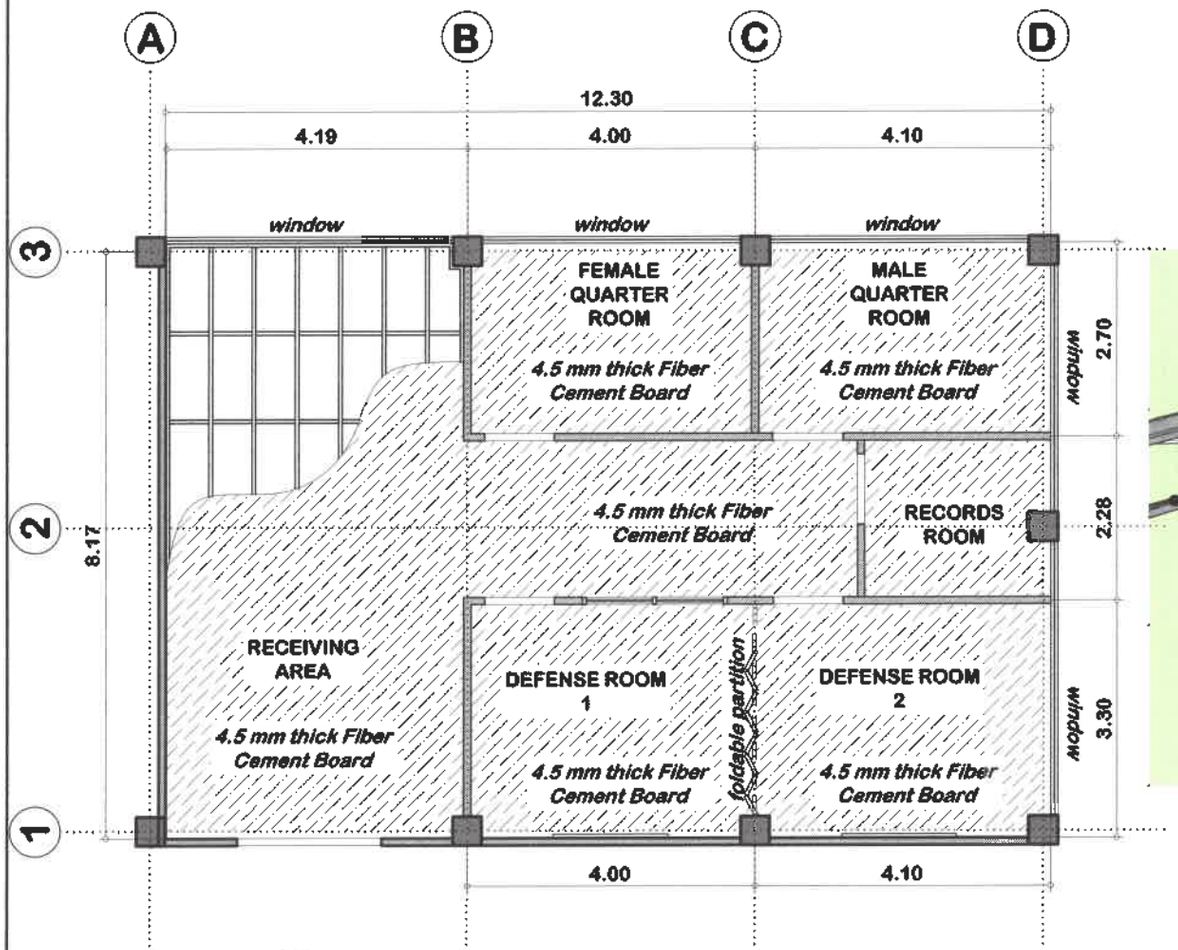

1 A5 FLOOR PLAN (RENOVATION)
SCALE 1:100MTS

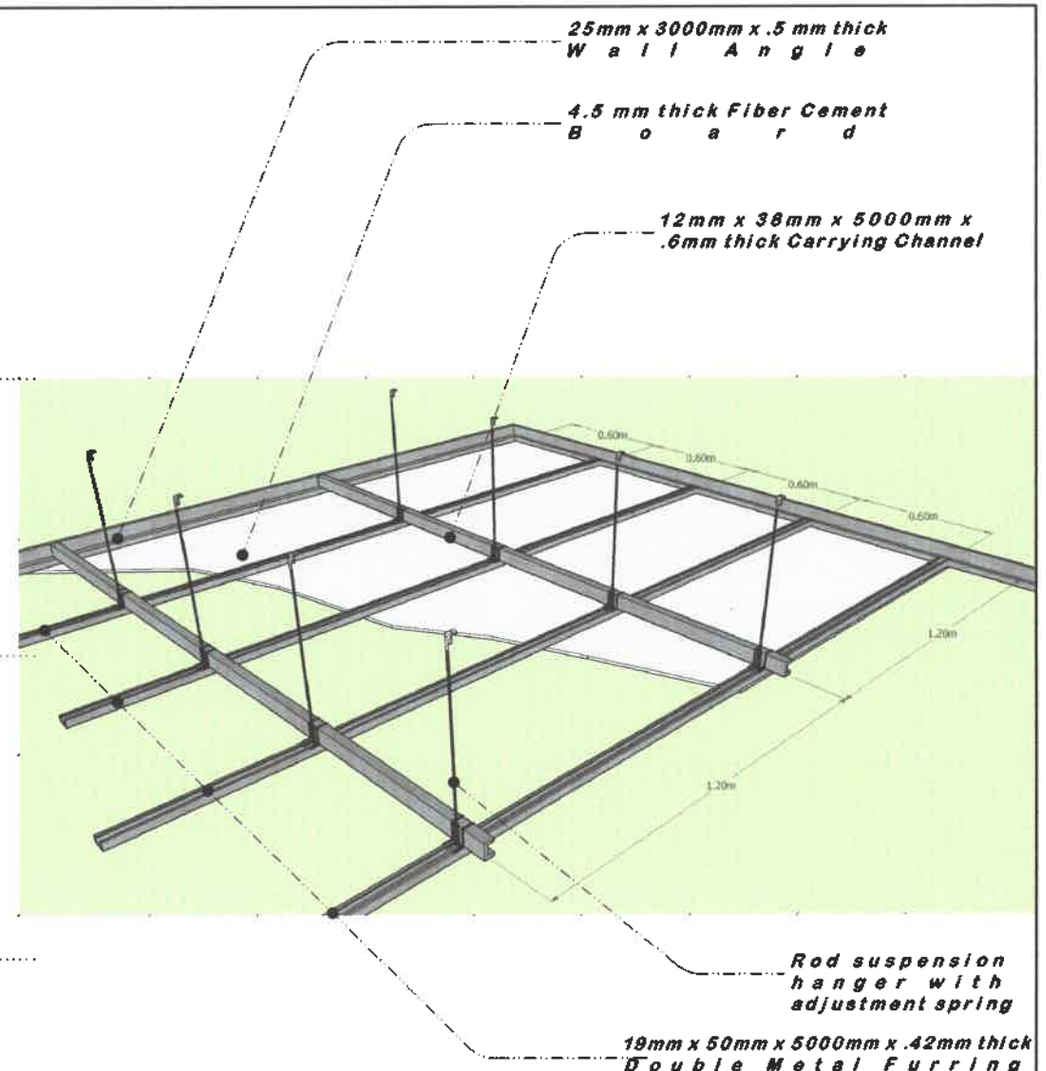

2 A5 CEILING FRAMING DETAIL
NOT TO SCALE

HAZELINE N. TIBANGAY UNIVERSITY ARCHITECT PRC LIC. No. 028540 VALIDITY: PTR No. ISSUED:	PRC LIC. No. VALIDITY: PTR No. ISSUED:	CAD BY: EMS - NOV 2023	REPAIR &UPGRADING OF AC 208 LABORATORY OF CA BSU,KM.6 BSU COMPOUND LA TRINIDAD, BENGUET PROJECT / LOCATION	BENGUET STATE UNIVERSITY 1916	BENGUET STATE UNIVERSITY LA TRINIDAD, BENGUET OWNER	CONSTANTINO T. SUDAYPAN SR. END USER	SAMUEL S. POLIDEN VP FOR ACADEMIC AFFAIRS	FELIPE SALAING COMILA PRESIDENT	SHEET CONTENT AS SHOWN REVISION DATE: REVISION NO.:	SHEET NO. A-5 5 10

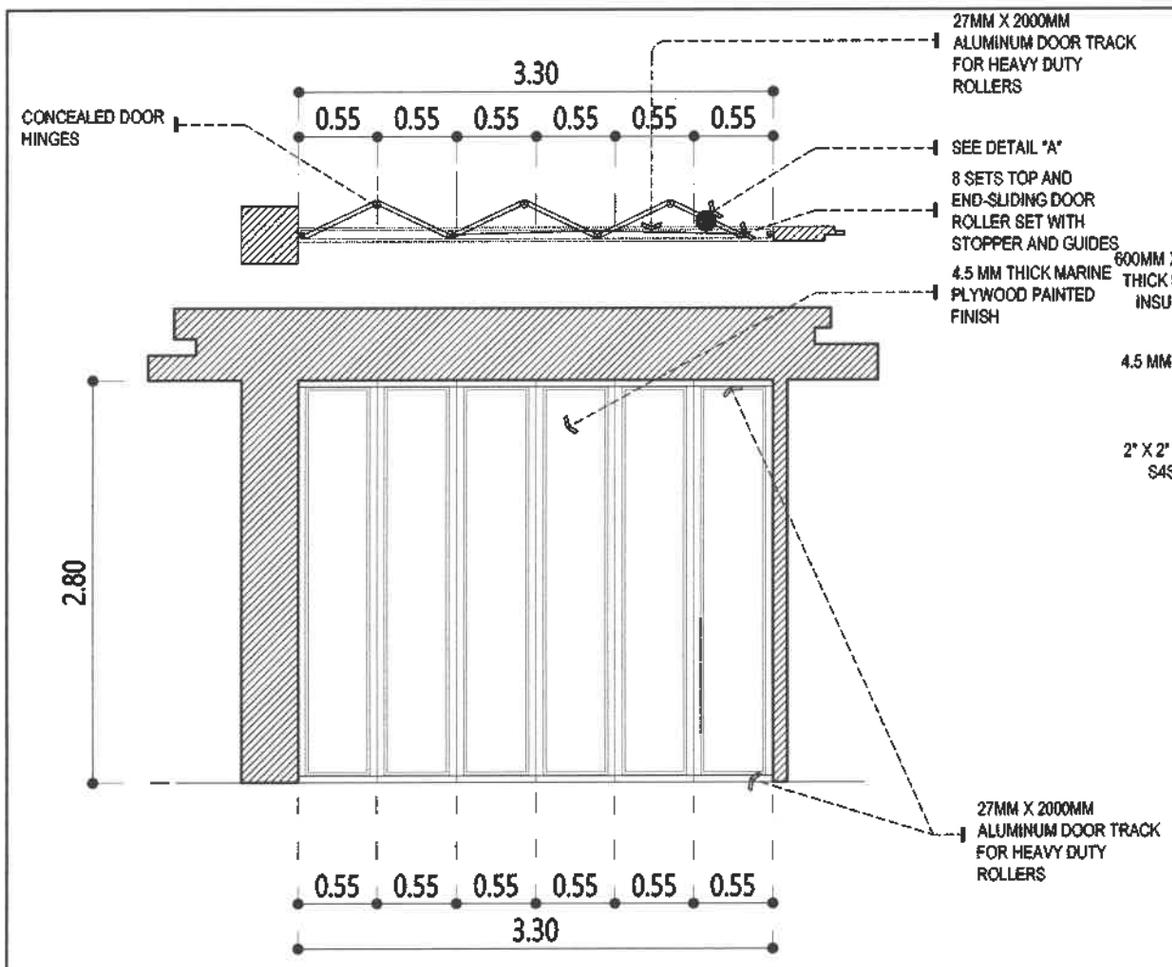

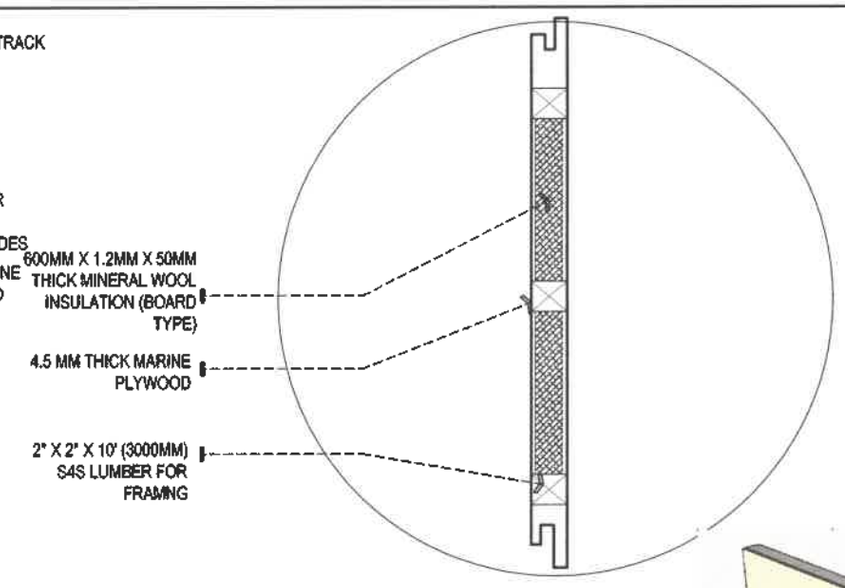

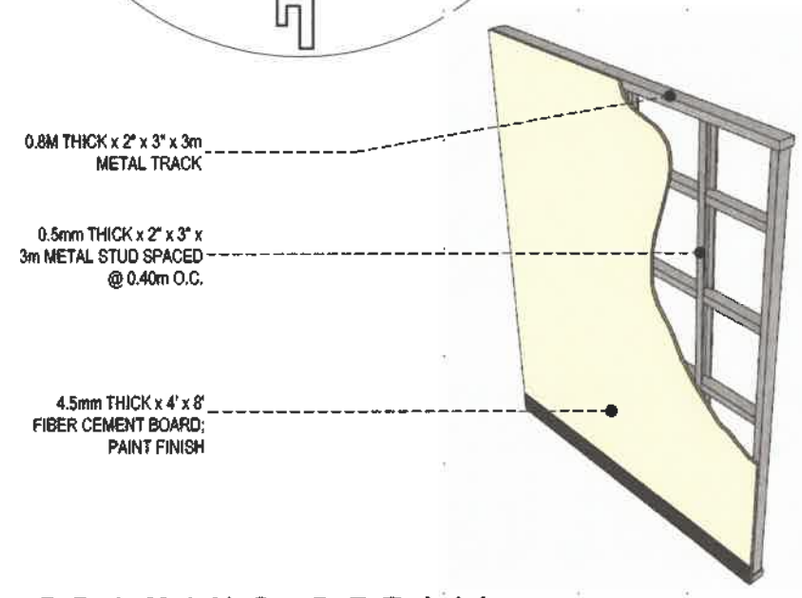

1 A6 FOLDABLE PARTITION DETAILS

SCALE 1:50MTS

2 A6 WALL FRAMING DETAIL

NOT TO SCALE

HAZELINE N. TIBANGAY UNIVERSITY ARCHITECT PRC LIC. No. 028540 VALIDITY: PTR No. ISSUED:	PRC LIC. No. PTR No.	VALIDITY: ISSUED:	CAD BY: MADYA. NOV.2023	REPAIR &UPGRADING OF AC 208 LABORATORY OF CA BSU,KM.6 BSU COMPOUND LA TRINIDAD, BENGUET PROJECT / LOCATION	BENGUET STATE UNIVERSITY LA TRINIDAD, BENGUET OWNER	CONSTANTINO T. SUDAYPAN SR. END USER	SAMUEL S. POLIDEN VP FOR ACADEMIC AFFAIRS	FELIPE SULAING COMILA PRESIDENT	SHEET CONTENT: AS SHOWN REVISION DATE: REVISION NO.:	SHEET NO. A-6 6/10

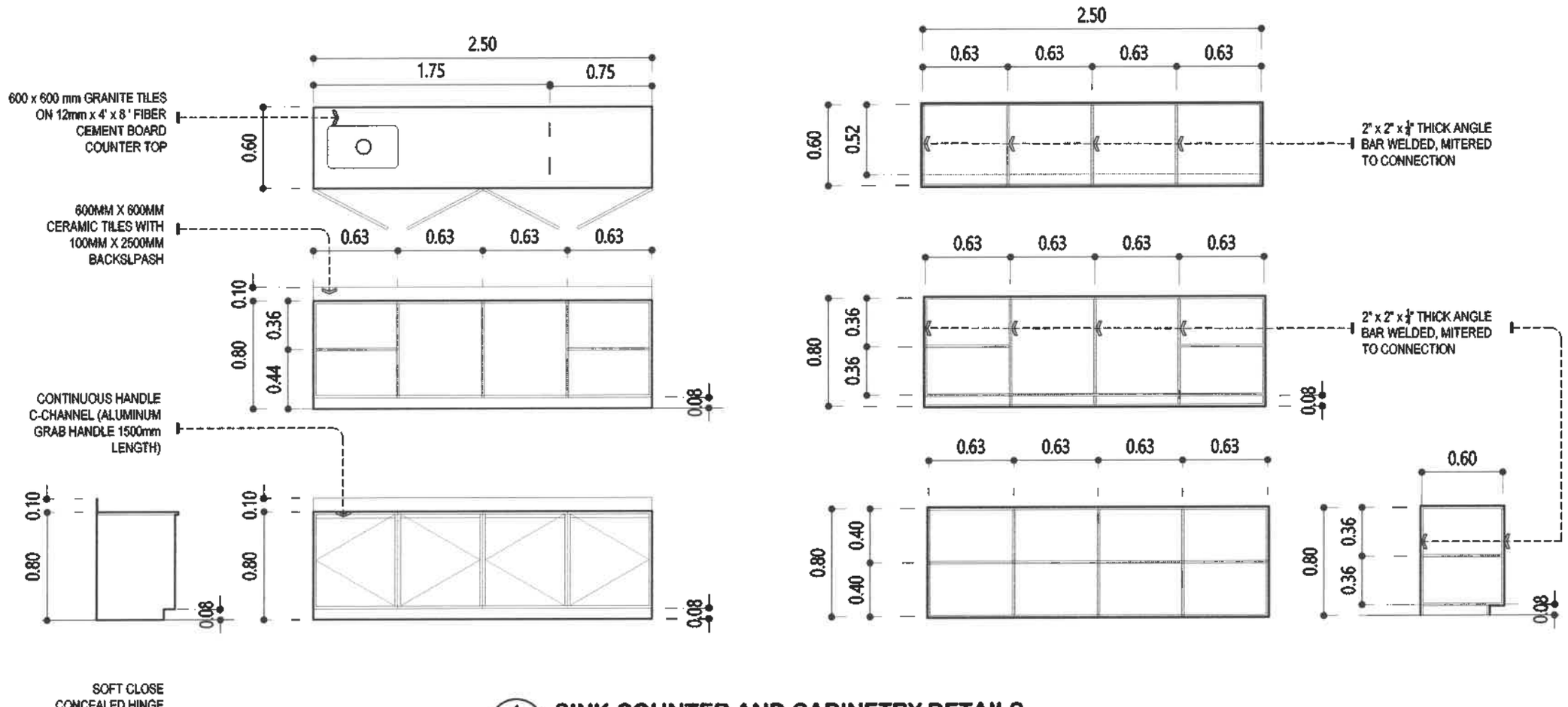

1 / A 7 SINK COUNTER AND CABINETRY DETAILS

SCALE 1:40MTS

HAZELINE N. TIBANGAY UNIVERSITY ARCHITECT		CAD BY: MADV - NOV-2023	REPAIR & UPGRADING OF AC 208 LABORATORY OF CA BSU,KM.6 BSU COMPOUND LA TRINIDAD, BENGUET	BENGUET STATE UNIVERSITY LA TRINIDAD, BENGUET	CONSTANTINO T. SUDAYPAN SR.	SAMUEL S. POLIDEN	FELIPE SALAING COMILA	SHEET CONTENT: AS SHOWN REVISION DATE: REVISION NO.:	SHEET NO. A-7 7 10
PRC LIC. No. 028540 / PTR No.	VALIDITY: / ISSUED:		PROJECT / LOCATION	OWNER	END-USER	VP FOR ACADEMIC AFFAIRS	PRESIDENT		

LEGEND	
	2-T8 LED LAMP WITH HOUSING AND DIFFUSER
S1	SINGLE SWITCH
	CIRCUIT/HOMERUN
	PANEL BOARD

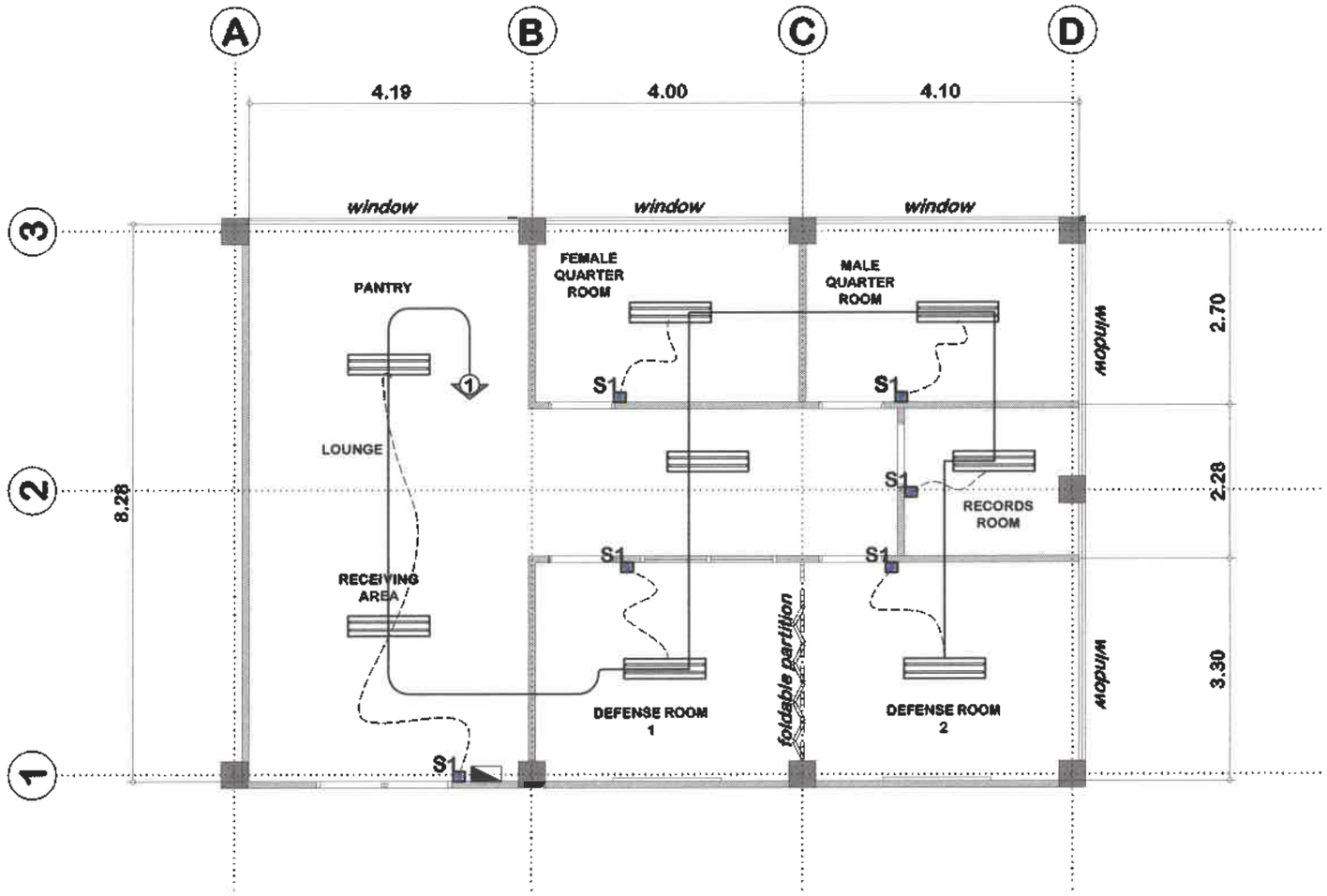

1 / E1 ELECTRICAL LIGHTING LAYOUT

SCALE 1:100MTS

HAZELINE N. TIBANGAY UNIVERSITY ARCHITECT		CAD BY: EMS- NOV 2023	REPAIR &UPGRADING OF AC 208 LABORATORY OF CA BSU,KM.6 BSU COMPOUND LA TRINIDAD, BENGUET	BENGUET STATE UNIVERSITY LA TRINIDAD, BENGUET	CONSTANTINO T. SUDAYPAN SR.	SAMUEL S. POLIDEN	FELIPE SALAING COMILA	SHEET CONTENT: AS SHOWN	SHEET NO.
PRC LIC. No. 028540	VALIDITY:		PROJECT / LOCATION	OWNER	END USER	VP FOR ACADEMIC AFFAIRS	PRESIDENT	REVISION DATE:	E-1
PTR No.	ISSUED:							REVISION NO.:	8 10

L E G E N D	
	CIRCUIT/HOMERUN
	DUPLEX CONVENIENCE OUTLET

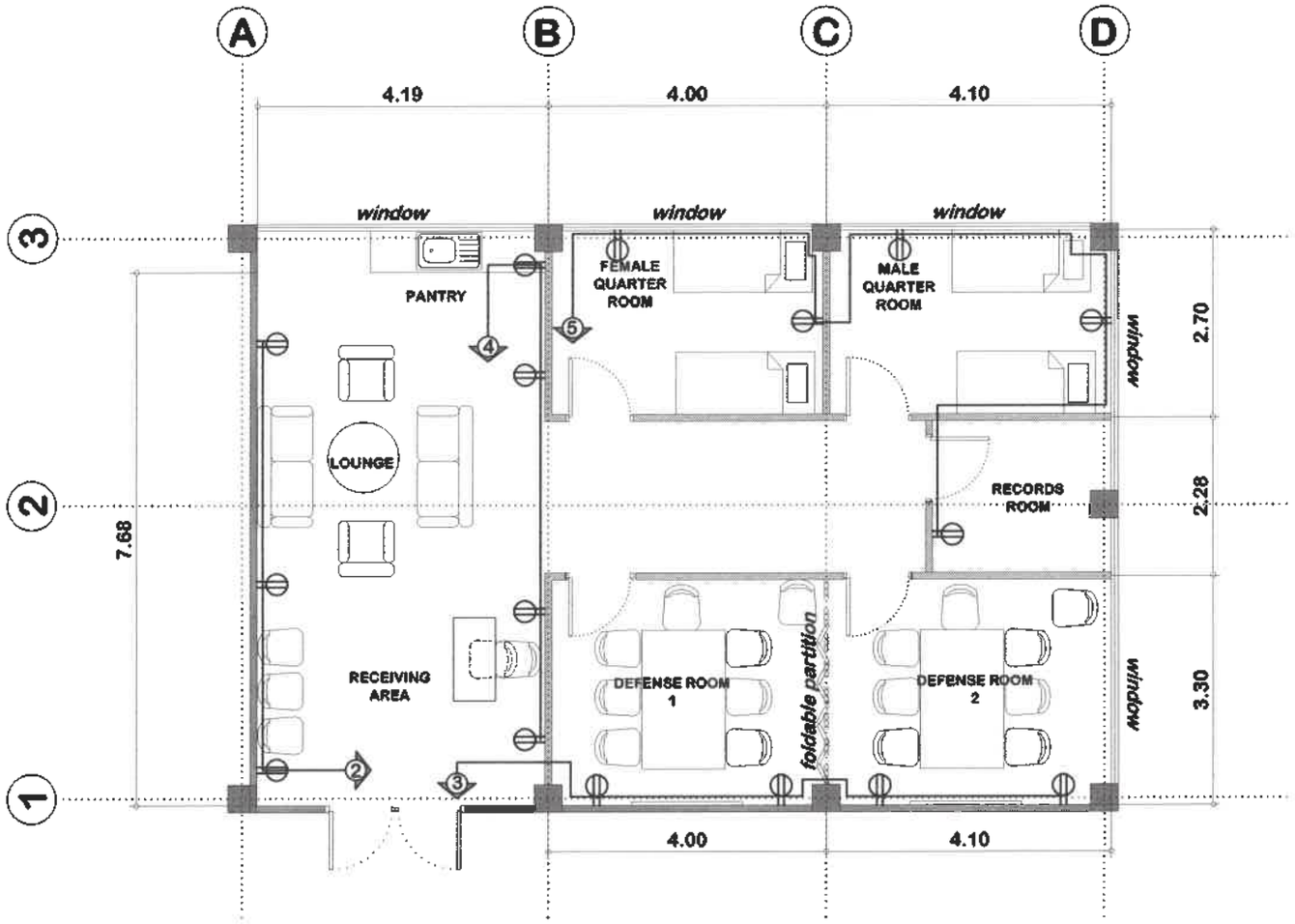

1 / E2 ELECTRICAL POWER LAYOUT

SCALE 1:100MTS

HAZELINE N. TIBANGAY UNIVERSITY ARCHITECT PRC LIC. No. 028540 VALIDITY: PTR No. ISSUED:	PRC LIC. No. VALIDITY: PTR No. ISSUED:	CAD BY: EMS- NOV 2023	REPAIR &UPGRADING OF AC 208 LABORATORY OF CA BSU,KM.6 BSU COMPOUND LA TRINIDAD, BENGUET PROJECT / LOCATION	BENGUET STATE UNIVERSITY 1916	BENGUET STATE UNIVERSITY LA TRINIDAD, BENGUET OWNER	CONSTANTINO T. SUDAPAN SR. ENGINEER	SAMUEL S. POLIDEN VP FOR ACADEMIC AFFAIRS	FELIPE SALAING COMILA PRESIDENT	SHEET CONTENT: AS SHOWN REVISION DATE: REVISION NO.:	SHEET NO. E-2 9/10

TABULATED LOAD COMPUTATION

	CKT NO	DESCRIPTION	QUANTITY	WATTS/OUTLET	WATTS/CIRCUIT	VOLTS	AMPERAGE	AF	AT	P	SIZE OF WIRE AND CONDUIT
PANEL BOX 1	1	LIGHTING FIXTURES	1	100	100	230	0.43	50	15	2	2-2.0mm² THHN in 20mm CONDUIT
	2	CONVENIENCE OUTLET	3	180	540	230	2.35	50	15	2	2-3.5mm² THHN in 20mm CONDUIT
	3	CONVENIENCE OUTLET	4	180	720	230	3.13	50	15	2	2-3.5mm² THHN in 20mm CONDUIT
	4	CONVENIENCE OUTLET	4	180	720	230	3.13	50	15	2	2-3.5mm² THHN in 20mm CONDUIT
	5	CONVENIENCE OUTLET	5	180	900	230	3.91	50	15	2	2-3.5mm² THHN in 20mm CONDUIT
	TOTAL				2980	230	12.96				

LOAD COMPUTATION

TOTAL CURRENT LOAD
I = 2980 w

WORKING CURRENT
I = w/v
= 2980 / 230 w
= 12.96 amps

SAFETY DEMAND FACTOR
12.96 amps x 80% = 23.328 amps

USE: *60 AMPS. MAIN SERVICE EQUIPMENT, 2 POLES, 230 VOLTS*

2 - 150mm², THHN FOR SERVICE ENTRANCE CONDUCTOR

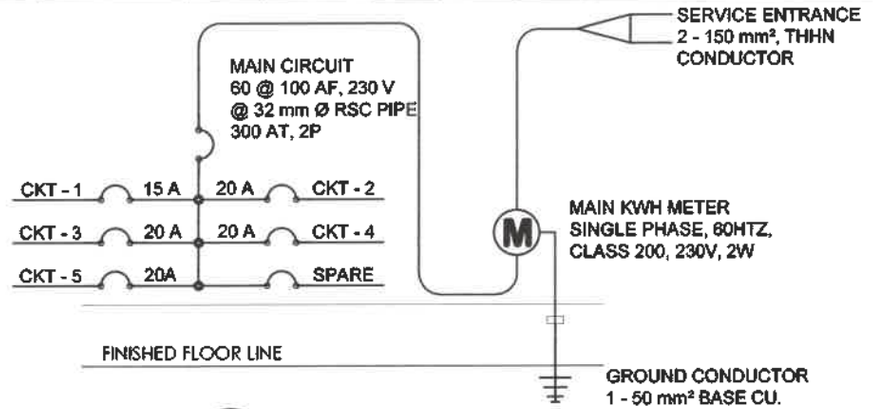

2 E3 RISER DIAGRAM
NOT TO SCALE

L E G E N D	
	2-T8 LED LAMP WITH HOUSING AND DIFFUSER
S1	SINGLE SWITCH
	CIRCUIT/HOMERUN
	DUPLEX CONVENIENCE OUTLET
	PANEL BOARD

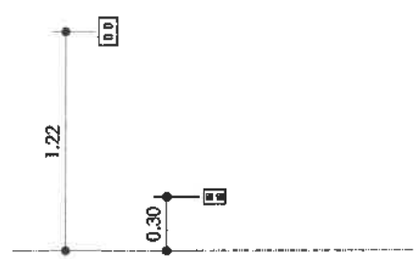

1 E3 MOUNTING HEIGHT
NOT TO SCALE

GENERAL ELECTRICAL NOTES

1. ALL ELECTRICAL WORKS AND INSTALLATION SHALL CONFORM WITH THE PROVISIONS OF THE PHILIPPINE ELECTRICAL CODE OF THE NATIONAL AND LOCAL AUTHORITIES CONCERNED IN THE ENFORCEMENT OF ELECTRICAL CODES WITH RULES AND REGULATIONS OF THE UTILITY COMPANIES.
2. SERVICE UTILITY TO THE BUILDING SHALL BE 220 VOLTS, 60 HRTZ, SINGLE PHASE THREE WIRE SYSTEM.
3. THE CONTRACTOR SHALL VERIFY AND ORIENT THE ACTUAL LOCATION OF THE CONCRETE TERMINAL POST FOR CONNECTION TO THE POWER SUPPLY AND OR THE TELEPHONE SERVICE.
4. ALL INSTALLATIONS SHALL BE CONCEALED FROM VIEW. WIRING SHALL BE ENCASED IN POLYVINYL CHLORINE (PVC) PIPES SCHEDULED 40 FOR POWER SERVICE ENTRANCE CAP WHICH SHALL BE IN RIGID STEEL CONDUIT (RSC) UNLESS OTHERWISE SPECIFIED.
5. MINIMUM CONDUIT WIRE SHALL BE NO. 12 AWG AND ½ DIAMETER PIPE RESPECTIVELY, UNLESS OTHERWISE SPECIFIED.
6. MINIMUM WIRE AND CONDUIT SHALL BE PROVIDED EVEN IF NOT INDICATED IN THE DRAWINGS TO ACCOMMODATE NO. OF SPLICES OR WIRES.
7. FLUORESCENT LAMPS SHALL BE PROVIDED WITH POLYESTER FILLED PRE-HEATED THERMALLY PROTECTED HIGH POWER FACTOR BALLAST.
8. ALL MATERIALS TO BE LISTED SHALL BE NEW AND OF APPROVED QUALITY FOR BOTH LOCATION AND INTENDED USE.
9. LIGHT CONTROL SWITCHES SHALL BE RATED TO A, 250 VOLTS FOR ROUND SLOTS, 220 VOLTS AND PARALLEL SLOTS FOR SPECIAL PURPOSE OUTLETS SHALL BE RATED 15 AMPERE OR 20 AMPERE AS REQUIRED.
10. DUPLEX RECEPTACLES SHALL BE RATED 10 AMPERE, 250 VOLTS (ROUND SLOTS) FOR A LOAD NOT GREATER THAN 5.0 AMPS. LIGHT SWITCHES SHALL BE INSTALLED FOR OPERATION WITH VERTICAL MOTION.
11. ELECTRICAL INSTALLATION SHALL BE DONE UNDER THE DIRECT SUPERVISION OF A DULY LICENSED ELECTRICAL ENGINEER OR A REGISTERED MASTER ELECTRICIAN.
12. ALL CHANGES IN PLANS AND SPECIFICATION SHALL BE DONE, UNLESS OTHERWISE APPROVED BY THE ARCHITECT.

HAZELINE N. TIBANGAY UNIVERSITY ARCHITECT PRC LIC. No. 028540 / VALIDITY: PTR No. / ISSUED:	PRC LIC. No. / VALIDITY: PTR No. / ISSUED:	CAO-8-EMS-NOV.2023	REPAIR &UPGRADING OF AC 208 LABORATORY OF CA BSU.KM.6 BSU COMPOUND LA TRINIDAD, BENGUET PROJECT / LOCATION	BENGUET STATE UNIVERSITY 1916	BENGUET STATE UNIVERSITY LA TRINIDAD, BENGUET OWNER	CONSTANTINO T. SUDAYPAN SR. END-USER	SAMUEL S. POLIDEN VP FOR ACADEMIC AFFAIRS	FELIPE SALAING COMILA PRESIDENT	SHEET CONTENT: AS SHOWN REVISION DATE: REVISION NO.:	SHEET NO. E-3 10/10